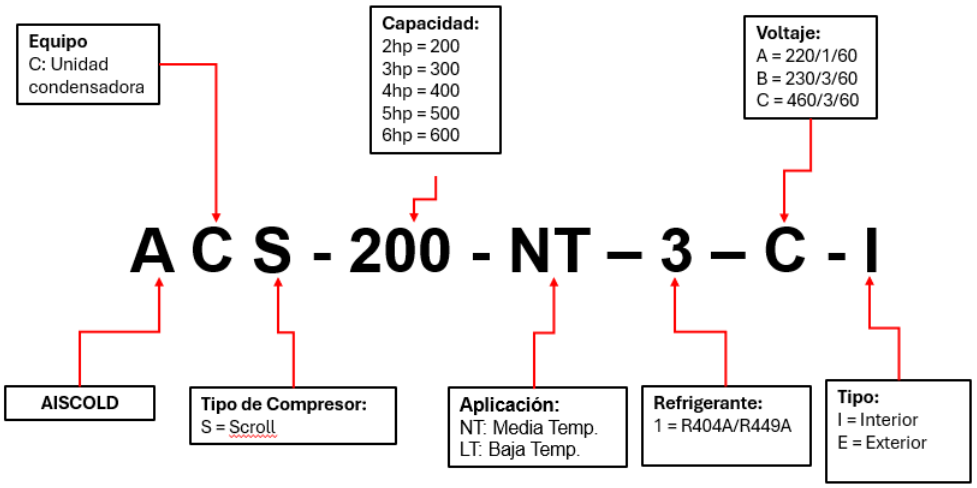

AISCOLD | DATOS ELÉCTRICOS

UNIDADES CONDENSADORAS EXTERIORES													
Modelo Unidad	HP	Compresor	FLA	MCA	MOPD	Voltaje	Motor Ventilador				Compresor		Desplazamiento
							W	Cantidad	Amp	CFM	RLA	LRA	CFH
ACS200NT1AE	2	ERF15G-C1NBWS	12.5	15.33	25	230 / 1 / 60	250	1	1.2	2500	11.3	102	4.29
ACS200NT1BE	2	ERF15G-D1NBWS	10.47	12.87	20	230 / 3 / 60	250	1	0.87	2500	9.6	71	4.29
ACS250NT1AE	2.5	ERF19G-C1NBWS	14.7	18	30	230 / 1 / 60	330	1	1.5	3000	13.2	121.5	5.29
ACS250NT1BE	2.5	ERF19G-D1NBWS	10.87	13.35	20	230 / 3 / 60	320	1	0.97	3000	9.9	89	5.29
ACS300NT1AE	3	ERF21G-C1NBWS	15.7	19.25	30	230 / 1 / 60	330	1	1.5	3000	14.2	121.5	5.94
ACS300NT1BE	3	ERF21G-D1NBWS	11.97	14.72	25	230 / 3 / 60	320	1	0.97	3000	11	89	5.94
ACS400NT1AE	4	ERF30G-C1NBWS	25.4	30.65	50	230 / 1 / 60	1050	1	4.4	6200	21	134.5	8.29
ACS400NT1BE	4	ERF30G-D1NBWS	16.65	20.15	30	230 / 3 / 60	865	1	2.65	6200	14	155	8.29
ACS500NT1AE	5	ERF37G-C1NBWS	31.2	37.9	60	230 / 1 / 60	1050	1	4.4	6200	26.8	152	10.12
ACS500NT1BE	5	ERF37G-D1NBWS	19.25	23.4	40	230 / 3 / 60	865	1	2.65	6200	16.6	155	10.12
ACS600NT1BE	6	ERF45G-D1NBWS	22.45	27.4	45	230 / 3 / 60	865	1	2.65	6200	19.8	164	12.18

UNIDADES CONDENSADORAS INTERIORES													
Modelo Unidad	HP	Compresor	FLA	MCA	MOPD	Voltaje	Motor Ventilador				Compresor		Desplazamiento
							W	Cantidad	Amp	CFM	RLA	LRA	CFH
ACS200NT1AI	2	ERF15G-C1NBWS	12.5	15.33	25	230 / 1 / 60	250	1	1.2	2500	11.3	102	4.29
ACS200NT1BI	2	ERF15G-D1NBWS	10.47	12.87	20	230 / 3 / 60	250	1	0.87	2500	9.6	71	4.29
ACS250NT1AI	2.5	ERF19G-C1NBWS	14.7	18	30	230 / 1 / 60	330	1	1.5	3000	13.2	121.5	5.29
ACS250NT1BI	2.5	ERF19G-D1NBWS	10.87	13.35	20	230 / 3 / 60	320	1	0.97	3000	9.9	89	5.29
ACS300NT1AI	3	ERF21G-C1NBWS	15.7	19.25	30	230 / 1 / 60	330	1	1.5	3000	14.2	121.5	5.94
ACS300NT1BI	3	ERF21G-D1NBWS	11.97	14.72	25	230 / 3 / 60	320	1	0.97	3000	11	89	5.94
ACS400NT1AI	4	ERF30G-C1NBWS	25.4	30.65	50	230 / 1 / 60	1050	1	4.4	6200	21	134.5	8.29
ACS400NT1BI	4	ERF30G-D1NBWS	16.65	20.15	30	230 / 3 / 60	865	1	2.65	6200	14	155	8.29
ACS500NT1AI	5	ERF37G-C1NBWS	31.2	37.9	60	230 / 1 / 60	1050	1	4.4	6200	26.8	152	10.12
ACS500NT1BI	5	ERF37G-D1NBWS	19.25	23.4	40	230 / 3 / 60	865	1	2.65	6200	16.6	155	10.12
ACS600NT1BI	6	ERF45G-D1NBWS	22.45	27.4	45	230 / 3 / 60	865	1	2.65	6200	19.8	164	12.18

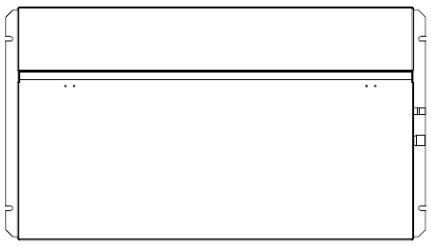

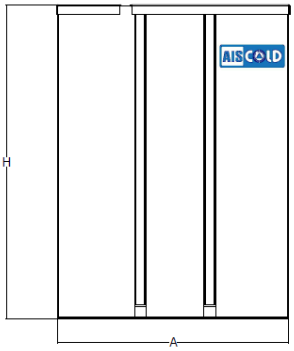

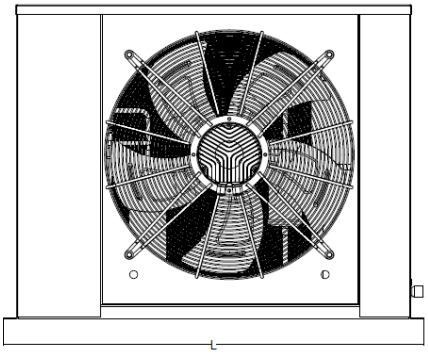

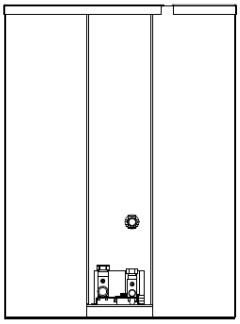

AISCOLD | ESPECIFICACIONES

Modelo Unidad	Conexiones (DI) pulg		Dimensiones (mm)			Dimensiones (pulg)			Peso	
	Succión	Liquido	L	A	H	L	A	H	Kg	Lb
ACS200NT1AE	7/8	3/8	845	485	491	33	19	20	90	199
ACS200NT1BE	7/8	3/8	845	485	491	33	19	20	90	199
ACS250NT1AE	7/8	1/2	912	485	569	36	19	23	110	243
ACS250NT1BE	7/8	1/2	912	485	569	36	19	23	110	243
ACS300NT1AE	7/8	1/2	912	485	569	36	19	23	110	243
ACS300NT1BE	7/8	1/2	912	485	569	36	19	23	110	243
ACS400NT1AE	7/8	5/8	1113	613	833	44	24	33	130	287
ACS400NT1BE	7/8	5/8	1113	613	833	44	24	33	130	287
ACS500NT1AE	1 1/8	5/8	1113	613	833	44	24	33	130	287
ACS500NT1BE	1 1/8	5/8	1113	613	833	44	24	33	130	287
ACS600NT1BE	1 1/8	5/8	1113	613	833	44	24	33	130	287
Modelo Unidad	Conexiones (DI) pulg		Dimensiones (mm)			Dimensiones (pulg)			Peso	
	Succión	Liquido	L	A	H	L	A	H	Kg	Lb
ACS200NT1AI	7/8	3/8	845	485	491	33	19	20	79	174
ACS200NT1BI	7/8	3/8	845	485	491	33	19	20	79	174
ACS250NT1AI	7/8	1/2	912	485	569	36	19	23	99	218
ACS250NT1BI	7/8	1/2	912	485	569	36	19	23	99	218
ACS300NT1AI	7/8	1/2	912	485	569	36	19	23	99	218
ACS300NT1BI	7/8	1/2	912	485	569	36	19	23	99	218
ACS400NT1AI	7/8	5/8	1113	613	833	44	24	33	119	262
ACS400NT1BI	7/8	5/8	1113	613	833	44	24	33	119	262
ACS500NT1AI	1 1/8	5/8	1113	613	833	44	24	33	119	262
ACS500NT1BI	1 1/8	5/8	1113	613	833	44	24	33	119	262
ACS600NT1BI	1 1/8	5/8	1113	613	833	44	24	33	119	262

AISCOLD | CAPACIDADES R-404A 208-230/1/60Hz

Modelo unidad	Compresor	H. P	TSC		TSE ºF C=Capacidad Btu's/h P=Potencia Watts A=Corriente Amps.										
					-10	-5	0	5	10	15	20	25	30	35	40
ACS200NT1A_	ERF15G-C1	2	130	C	6,741	7,659	8,660	9,756	10,960	12,285	13,745	15,352	17,119	19,059	21,186
				P	2,204	2,265	2,326	2,385	2,444	2,501	2,557	2,611	2,664	2,715	2,764
				A	11	11	11	11	12	12	12	12	12	12	13
			120	C	7,692	8,704	9,808	11,018	12,348	13,808	15,414	17,177	19,111	21,229	23,543
				P	1,992	2,048	2,104	2,159	2,213	2,267	2,319	2,370	2,420	2,468	2,515
				A	10	11	11	11	11	11	11	11	12	12	12
			110	C	8,557	9,664	10,874	12,201	13,657	15,256	17,009	18,931	21,034	23,332	25,836
				P	1,811	1,862	1,913	1,964	2,014	2,064	2,113	2,162	2,209	2,255	2,299
				A	10	10	10	10	11	11	11	11	11	11	11
			100	C	9,354	10,559	11,878	13,323	14,909	16,647	18,551	20,633	22,908	25,387	28,084
				P	1,650	1,696	1,743	1,790	1,837	1,883	1,929	1,975	2,020	2,064	2,107
				A	10	10	10	10	10	10	10	10	11	11	11
			90	C	10,104	11,409	12,838	14,404	16,121	18,001	20,058	22,303	24,751	27,414	30,305
				P	1,499	1,541	1,584	1,627	1,670	1,714	1,757	1,801	1,843	1,886	1,928
				A	9	9	10	10	10	10	10	10	10	10	10
ACS250NT1A_	ERF19G-C1	2.5	130	C	7,947	9,030	10,209	11,501	12,921	14,484	16,205	18,099	20,182	22,470	24,977
				P	2,573	2,645	2,715	2,785	2,854	2,920	2,986	3,049	3,111	3,170	3,227
				A	13	13	13	13	14	14	14	14	14	15	15
			120	C	9,068	10,261	11,563	12,990	14,557	16,279	18,172	20,251	22,531	25,028	27,756
				P	2,326	2,392	2,457	2,521	2,585	2,647	2,708	2,768	2,826	2,882	2,937
				A	12	12	13	13	13	13	13	13	14	14	14
			110	C	10,088	11,393	12,820	14,385	16,101	17,986	20,053	22,319	24,798	27,507	30,459
				P	2,115	2,174	2,234	2,293	2,352	2,410	2,468	2,524	2,579	2,633	2,685
				A	12	12	12	12	12	12	13	13	13	13	13
			100	C	11,028	12,449	14,003	15,707	17,577	19,626	21,870	24,326	27,007	29,930	33,109
				P	1,926	1,981	2,035	2,090	2,145	2,199	2,253	2,306	2,359	2,410	2,460
				A	11	11	12	12	12	12	12	12	12	12	13
			90	C	11,912	13,451	15,135	16,982	19,006	21,222	23,647	26,294	29,180	32,320	35,728
				P	1,750	1,799	1,849	1,900	1,950	2,001	2,052	2,103	2,153	2,202	2,251
				A	11	11	11	11	11	11	11	12	12	12	12
ACS300NT1A_	ERF21G-C1	3	130	C	9,242	10,501	11,873	13,376	15,027	16,844	18,845	21,048	23,471	26,131	29,047
				P	2,943	3,025	3,105	3,185	3,263	3,340	3,414	3,487	3,557	3,625	3,690
				A	14	14	14	14	15	15	15	15	15	16	16
			120	C	10,546	11,933	13,447	15,107	16,929	18,932	21,133	23,551	26,203	29,106	32,279
				P	2,660	2,735	2,810	2,883	2,956	3,027	3,097	3,165	3,232	3,296	3,359
				A	13	13	13	14	14	14	14	14	15	15	15
			110	C	11,731	13,250	14,909	16,728	18,725	20,916	23,321	25,956	28,839	31,989	35,423
				P	2,418	2,487	2,555	2,623	2,690	2,757	2,822	2,887	2,950	3,011	3,071
				A	13	13	13	13	13	13	14	14	14	14	14
			100	C	12,825	14,477	16,285	18,267	20,441	22,824	25,434	28,289	31,408	34,807	38,504
				P	2,203	2,265	2,328	2,390	2,453	2,515	2,576	2,637	2,697	2,756	2,814
				A	12	12	12	13	13	13	13	13	13	13	13
			90	C	13,854	15,642	17,602	19,749	22,103	24,681	27,500	30,579	33,935	37,586	41,550
				P	2,001	2,058	2,115	2,173	2,231	2,289	2,347	2,404	2,462	2,518	2,574
				A	12	12	12	12	12	12	12	12	13	13	13
ACS400NT1A_	ERF30G-C1	4	130	C	13,038	14,814	16,750	18,870	21,199	23,763	26,586	29,694	33,112	36,865	40,977
				P	4,392	4,515	4,635	4,754	4,871	4,985	5,097	5,205	5,310	5,411	5,509
				A	20	21	21	21	22	22	22	23	23	23	23
			120	C	14,878	16,835	18,971	21,312	23,883	26,708	29,814	33,225	36,965	41,061	45,538
				P	3,971	4,083	4,194	4,304	4,412	4,519	4,623	4,725	4,824	4,920	5,013
				A	19	20	20	20	21	21	21	21	22	22	22
			110	C	16,550	18,692	21,033	23,600	26,416	29,508	32,900	36,617	40,685	45,128	49,973
				P	3,610	3,712	3,814	3,915	4,015	4,115	4,213	4,309	4,403	4,494	4,583
				A	19	19	19	19	20	20	20	20	20	21	21
			100	C	18,093	20,423	22,974	25,770	28,837	32,198	35,881	39,909	44,308	49,103	54,320

				P	3,288	3,381	3,475	3,568	3,661	3,754	3,846	3,937	4,026	4,114	4,200
				A	18	18	18	19	19	19	19	19	20	20	20
			90	C	19,544	22,067	24,831	27,861	31,182	34,818	38,795	43,139	47,873	53,024	58,617
				P	2,987	3,072	3,157	3,243	3,330	3,416	3,503	3,589	3,675	3,759	3,842
				A	17	18	18	18	18	18	18	18	19	19	19
ACS500NT1A_	*ERF37G-C1*	5	130	C	15,313	17,402	19,681	22,178	24,923	27,946	31,277	34,944	38,979	43,409	48,265
				P	5,125	5,268	5,409	5,548	5,684	5,817	5,947	6,074	6,196	6,314	6,428
				A	26	26	27	27	28	28	28	29	29	30	30
			120	C	17,481	19,779	22,290	25,043	28,068	31,394	35,052	39,069	43,477	48,304	53,581
				P	4,634	4,764	4,894	5,022	5,148	5,273	5,394	5,513	5,629	5,741	5,850
				A	25	25	25	26	26	27	27	27	27	28	28
			110	C	19,460	21,974	24,724	27,739	31,050	34,686	38,676	43,050	47,838	53,069	58,772
				P	4,212	4,331	4,450	4,568	4,686	4,801	4,916	5,028	5,137	5,244	5,348
				A	24	24	24	25	25	25	26	26	26	26	27
			100	C	21,289	24,025	27,020	30,304	33,908	37,859	42,189	46,926	52,100	57,740	63,877
				P	3,837	3,946	4,054	4,163	4,272	4,380	4,488	4,594	4,698	4,800	4,901
				A	23	23	24	24	24	24	24	25	25	25	25
			90	C	23,007	25,971	29,218	32,778	36,680	40,954	45,629	50,735	56,302	62,358	68,935
				P	3,486	3,584	3,684	3,784	3,885	3,986	4,087	4,188	4,288	4,386	4,483
				A	22	22	23	23	23	23	23	23	24	24	24

C: Capacidad en Btu/h; P: Potencia consumida en W; A: Amperes consumidos.
Cálculos considerados con retorno de gas al compresor 22R, subenfriamiento de 4R.

TSE: TEMPERATURA SATURADA DE EVAPORACIÓN.
TSC: TEMPERATURA SATURADA DE CONDENSACIÓN.

AISCOLD | CAPACIDADES R-404A 208-230/3/60Hz

Modelo unidad	Compresor	H. P	TSC		TSE ºF C=Capacidad Btu's/h P=Potencia Watts A=Corriente Amps.										
					-10	-5	0	5	10	15	20	25	30	35	40
ACS200NT1B_	ERF15G-D1	2	130	C	6,740	7,659	8,659	9,755	10,959	12,285	13,745	15,351	17,118	19,058	21,185
				P	2,170	2,230	2,290	2,348	2,406	2,462	2,517	2,571	2,623	2,673	2,721
				A	9	9	10	10	10	10	10	10	10	11	11
			120	C	7,692	8,703	9,808	11,018	12,347	13,808	15,413	17,177	19,111	21,228	23,542
				P	1,961	2,017	2,072	2,126	2,179	2,232	2,283	2,334	2,383	2,430	2,476
				A	9	9	9	9	9	9	10	10	10	10	10
			110	C	8,556	9,663	10,874	12,201	13,657	15,255	17,009	18,930	21,034	23,331	25,835
				P	1,783	1,833	1,884	1,934	1,983	2,032	2,081	2,128	2,175	2,220	2,264
				A	9	9	9	9	9	9	9	9	9	9	10
			100	C	9,354	10,559	11,877	13,323	14,908	16,646	18,550	20,633	22,907	25,386	28,082
				P	1,624	1,670	1,716	1,762	1,808	1,854	1,900	1,944	1,989	2,032	2,074
				A	8	8	8	8	9	9	9	9	9	9	9
			90	C	10,104	11,409	12,838	14,404	16,120	18,000	20,057	22,302	24,750	27,413	30,304
				P	1,476	1,517	1,559	1,602	1,645	1,687	1,730	1,773	1,815	1,857	1,898
				A	8	8	8	8	8	8	8	8	8	9	9
ACS250NT1B_	ERF19G-D1	2.5	130	C	7,964	9,049	10,232	11,527	12,949	14,516	16,240	18,139	20,227	22,519	25,031
				P	2,540	2,611	2,681	2,750	2,817	2,883	2,948	3,010	3,071	3,129	3,186
				A	9	10	10	10	10	10	10	11	11	11	11
			120	C	9,088	10,284	11,589	13,019	14,589	16,315	18,212	20,296	22,581	25,083	27,817
				P	2,297	2,361	2,426	2,489	2,552	2,613	2,674	2,733	2,790	2,846	2,899
				A	9	9	9	10	10	10	10	10	10	10	10
			110	C	10,110	11,418	12,848	14,416	16,137	18,025	20,097	22,368	24,853	27,567	30,526
				P	2,088	2,147	2,206	2,264	2,322	2,380	2,436	2,492	2,546	2,599	2,651
				A	9	9	9	9	9	9	9	10	10	10	10
			100	C	11,052	12,476	14,034	15,742	17,615	19,669	21,918	24,379	27,066	29,995	33,182
				P	1,902	1,955	2,009	2,063	2,117	2,171	2,224	2,277	2,328	2,379	2,429
				A	9	9	9	9	9	9	9	9	9	9	9
			90	C	11,939	13,480	15,169	17,019	19,048	21,269	23,699	26,352	29,244	32,390	35,806
				P	1,728	1,776	1,826	1,876	1,926	1,976	2,026	2,076	2,125	2,174	2,222
				A	8	8	8	8	8	8	9	9	9	9	9
ACS300NT1B_	ERF21G-D1	3	130	C	9,259	10,521	11,895	13,401	15,055	16,876	18,881	21,088	23,515	26,180	29,101
				P	2,909	2,990	3,070	3,148	3,226	3,301	3,375	3,447	3,516	3,583	3,648
				A	11	11	11	11	11	12	12	12	12	12	12
			120	C	10,566	11,955	13,473	15,135	16,961	18,968	21,173	23,595	26,252	29,161	32,340
				P	2,630	2,704	2,777	2,850	2,922	2,992	3,061	3,129	3,195	3,258	3,320
				A	10	10	10	11	11	11	11	11	11	11	12
			110	C	11,753	13,274	14,937	16,760	18,760	20,956	23,365	26,005	28,893	32,049	35,489
				P	2,390	2,458	2,525	2,592	2,659	2,725	2,790	2,853	2,915	2,976	3,035
				A	10	10	10	10	10	10	10	11	11	11	11
			100	C	12,849	14,504	16,316	18,301	20,479	22,867	25,482	28,343	31,467	34,872	38,576
				P	2,178	2,239	2,301	2,363	2,424	2,486	2,547	2,607	2,666	2,724	2,781
				A	9	10	10	10	10	10	10	10	10	10	10
			90	C	13,880	15,672	17,635	19,786	22,144	24,727	27,552	30,636	33,998	37,657	41,628
				P	1,978	2,034	2,091	2,147	2,205	2,262	2,320	2,377	2,433	2,489	2,544
				A	9	9	9	9	9	9	10	10	10	10	10
ACS400NT1B_	ERF30G-D1	4	130	C	12,780	14,521	16,419	18,496	20,780	23,293	26,060	29,107	32,457	36,136	40,167
				P	3,869	3,976	4,083	4,188	4,290	4,391	4,489	4,585	4,677	4,766	4,852
				A	13	14	14	14	14	15	15	15	15	15	16
			120	C	14,583	16,502	18,596	20,891	23,411	26,180	29,225	32,568	36,235	40,250	44,637
				P	3,498	3,596	3,694	3,791	3,886	3,980	4,072	4,162	4,249	4,334	4,416
				A	13	13	13	13	14	14	14	14	14	14	15
			110	C	16,223	18,322	20,617	23,133	25,894	28,924	32,249	35,893	39,881	44,236	48,985
				P	3,179	3,269	3,359	3,448	3,537	3,624	3,710	3,795	3,878	3,959	4,037
				A	12	13	13	13	13	13	13	13	14	14	14
			100	C	17,735	20,020	22,520	25,261	28,266	31,562	35,172	39,120	43,432	48,133	53,246

				P	2,896	2,978	3,060	3,143	3,225	3,306	3,387	3,467	3,546	3,623	3,699
				A	12	12	12	12	13	13	13	13	13	13	13
			90	C	19,158	21,631	24,341	27,310	30,565	34,130	38,028	42,286	46,927	51,976	57,458
				P	2,631	2,705	2,781	2,856	2,933	3,009	3,085	3,161	3,236	3,311	3,384
				A	12	12	12	12	12	12	12	12	12	12	13
ACS500NT1B_	*ERF37G-D1*	5	130	C	16,053	18,240	20,623	23,233	26,101	29,257	32,734	36,560	40,769	45,389	50,453
				P	4,902	5,039	5,174	5,307	5,437	5,564	5,689	5,810	5,927	6,040	6,148
				A	16	16	17	17	17	17	18	18	18	18	19
			120	C	18,318	20,727	23,358	26,240	29,405	32,884	36,708	40,907	45,513	50,556	56,068
				P	4,432	4,557	4,681	4,804	4,925	5,043	5,160	5,274	5,384	5,492	5,595
				A	15	16	16	16	16	16	17	17	17	17	17
			110	C	20,377	23,014	25,897	29,057	32,525	36,331	40,508	45,084	50,093	55,564	61,528
				P	4,029	4,143	4,257	4,370	4,482	4,593	4,702	4,809	4,914	5,016	5,116
				A	15	15	15	15	15	16	16	16	16	16	17
			100	C	22,277	25,146	28,287	31,729	35,505	39,644	44,178	49,138	54,554	60,458	66,881
				P	3,670	3,774	3,878	3,982	4,086	4,190	4,292	4,394	4,494	4,592	4,687
				A	14	14	15	15	15	15	15	15	15	16	16
			90	C	24,063	27,170	30,574	34,304	38,392	42,869	47,767	53,114	58,944	65,286	72,171
				P	3,334	3,428	3,524	3,620	3,716	3,813	3,910	4,006	4,101	4,196	4,288
				A	14	14	14	14	14	14	14	15	15	15	15
ACS600NT1B_	*ERF45G-D1*	6	130	C	19,476	22,129	25,021	28,188	31,667	35,497	39,714	44,357	49,463	55,069	61,213
				P	5,995	6,162	6,327	6,489	6,649	6,804	6,957	7,104	7,248	7,386	7,519
				A	19	19	20	20	20	21	21	21	22	22	22
			120	C	22,224	25,148	28,339	31,836	35,676	39,897	44,537	49,631	55,219	61,338	68,025
				P	5,420	5,573	5,725	5,874	6,022	6,168	6,310	6,449	6,584	6,716	6,843
				A	18	18	19	19	19	20	20	20	20	21	21
			110	C	24,723	27,922	31,420	35,253	39,461	44,079	49,146	54,699	60,776	67,413	74,650
				P	4,927	5,066	5,205	5,344	5,481	5,616	5,750	5,881	6,009	6,134	6,256
				A	18	18	18	18	18	19	19	19	19	19	20
			100	C	27,028	30,509	34,319	38,496	43,076	48,099	53,600	59,617	66,189	73,352	81,143
				P	4,488	4,615	4,742	4,870	4,997	5,124	5,249	5,373	5,495	5,615	5,732
				A	17	17	17	18	18	18	18	18	18	19	19
			90	C	29,195	32,965	37,094	41,620	46,580	52,012	57,953	64,441	71,514	79,209	87,562
				P	4,078	4,193	4,309	4,426	4,545	4,663	4,781	4,899	5,015	5,131	5,244
				A	16	16	17	17	17	17	17	17	17	18	18

C: Capacidad en Btu/h; P: Potencia consumida en W; A: Amperes consumidos.
Cálculos considerados con retorno de gas al compresor 22R, subenfriamiento de 4R.

TSE: TEMPERATURA SATURADA DE EVAPORACIÓN.
TSC: TEMPERATURA SATURADA DE CONDENSACIÓN.

AISCOLD | CAPACIDADES R-449A 208-230/1/60Hz

Modelo unidad	Compresor	H. P	TSC		TSE ºF C=Capacidad Btu's/h P=Potencia Watts A=Corriente Amps.										
					-10	-5	0	5	10	15	20	25	30	35	40
ACS200NT1A_	ERF15G-C1	2	130	C	7,152	8,105	9,153	10,305	11,571	12,959	14,481	16,144	17,959	19,935	22,081
				P	2,076	2,161	2,240	2,315	2,387	2,455	2,522	2,587	2,652	2,717	2,783
				A	10	10	11	11	11	11	12	12	12	12	13
			120	C	7,766	8,798	9,931	11,177	12,543	14,039	15,676	17,462	19,406	21,519	23,809
				P	1,931	2,003	2,070	2,134	2,196	2,256	2,314	2,373	2,432	2,492	2,555
				A	10	10	10	10	11	11	11	11	11	12	12
			110	C	8,360	9,467	10,683	12,018	13,481	15,082	16,829	18,734	20,805	23,051	25,482
				P	1,788	1,848	1,905	1,960	2,014	2,067	2,120	2,173	2,229	2,287	2,348
				A	9	10	10	10	10	10	10	11	11	11	11
			100	C	8,937	10,116	11,411	12,832	14,388	16,090	17,946	19,966	22,159	24,535	27,103
				P	1,646	1,697	1,746	1,794	1,842	1,890	1,939	1,990	2,044	2,101	2,163
				A	9	9	9	9	9	10	10	10	10	10	10
			90	C	9,503	10,749	12,119	13,623	15,270	17,068	19,029	21,160	23,472	25,975	28,676
				P	1,509	1,553	1,596	1,639	1,682	1,728	1,775	1,825	1,879	1,938	2,002
				A	9	9	9	9	9	9	9	9	10	10	10
ACS250NT1A_	ERF19G-C1	2.5	130	C	8,764	9,932	11,216	12,628	14,179	15,881	17,745	19,784	22,008	24,429	27,059
				P	2,411	2,510	2,602	2,689	2,772	2,852	2,929	3,005	3,080	3,155	3,232
				A	12	12	12	12	13	13	13	14	14	14	14
			120	C	9,517	10,781	12,170	13,696	15,370	17,204	19,210	21,398	23,781	26,370	29,177
				P	2,243	2,326	2,404	2,479	2,550	2,619	2,688	2,756	2,824	2,895	2,967
				A	11	11	12	12	12	12	13	13	13	13	13
			110	C	10,244	11,601	13,091	14,727	16,520	18,481	20,623	22,957	25,495	28,247	31,226
				P	2,076	2,146	2,212	2,276	2,339	2,400	2,462	2,524	2,589	2,656	2,727
				A	11	11	11	11	11	12	12	12	12	12	13
			100	C	10,952	12,396	13,983	15,724	17,632	19,717	21,991	24,467	27,154	30,066	33,213
				P	1,912	1,971	2,028	2,084	2,139	2,195	2,252	2,311	2,374	2,441	2,512
				A	10	10	10	11	11	11	11	11	11	12	12
			90	C	11,645	13,172	14,852	16,694	18,712	20,916	23,318	25,931	28,764	31,830	35,141
				P	1,752	1,803	1,853	1,903	1,954	2,006	2,061	2,120	2,183	2,251	2,325
				A	10	10	10	10	10	10	11	11	11	11	11
ACS300NT1A_	ERF21G-C1	3	130	C	9,877	11,193	12,640	14,231	15,979	17,897	19,998	22,295	24,802	27,530	30,494
				P	2,623	2,730	2,830	2,925	3,015	3,102	3,186	3,268	3,350	3,432	3,515
				A	13	13	13	14	14	14	14	15	15	15	16
			102	C	10,725	12,149	13,715	15,435	17,322	19,388	21,648	24,114	26,800	29,717	32,880
				P	2,440	2,530	2,615	2,696	2,774	2,849	2,923	2,997	3,072	3,148	3,227
				A	12	12	13	13	13	13	14	14	14	14	15
			110	C	11,545	13,073	14,753	16,596	18,617	20,828	23,241	25,872	28,731	31,833	35,190
				P	2,258	2,334	2,406	2,476	2,544	2,610	2,677	2,745	2,816	2,889	2,966
				A	12	12	12	12	12	13	13	13	13	13	14
			100	C	12,343	13,970	15,758	17,721	19,870	22,220	24,783	27,572	30,601	33,882	37,429
				P	2,080	2,144	2,206	2,267	2,327	2,387	2,450	2,514	2,582	2,655	2,732
				A	11	11	11	12	12	12	12	12	13	13	13
			90	C	13,123	14,845	16,737	18,813	21,087	23,571	26,279	29,222	32,415	35,871	39,602
				P	1,906	1,962	2,016	2,070	2,125	2,182	2,242	2,306	2,374	2,448	2,529
				A	11	11	11	11	11	11	11	12	12	12	12
ACS400NT1A_	ERF30G-C1	4	130	C	13,886	15,737	17,771	20,008	22,466	25,162	28,116	31,346	34,870	38,706	42,873
				P	3,870	4,028	4,176	4,316	4,449	4,577	4,701	4,823	4,944	5,065	5,188
				A	18	19	19	20	20	21	21	21	22	22	23
			120	C	15,078	17,082	19,283	21,701	24,353	27,259	30,437	33,904	37,679	41,781	46,228
				P	3,600	3,733	3,859	3,978	4,093	4,204	4,314	4,423	4,533	4,646	4,763
				A	18	18	18	19	19	19	20	20	21	21	21
			110	C	16,232	18,380	20,742	23,333	26,174	29,283	32,676	36,374	40,395	44,756	49,475
				P	3,332	3,444	3,551	3,654	3,754	3,852	3,951	4,051	4,155	4,263	4,376
				A	17	17	17	18	18	18	19	19	19	20	20
			100	C	17,353	19,641	22,155	24,914	27,936	31,240	34,844	38,766	43,024	47,637	52,623
				P	3,069	3,164	3,255	3,345	3,434	3,523	3,615	3,710	3,810	3,917	4,032

				A	16	16	17	17	17	17	18	18	18	19	19
			90	C	18,451	20,871	23,531	26,451	29,648	33,140	36,946	41,085	45,575	50,433	55,678
				P	2,813	2,895	2,975	3,055	3,136	3,220	3,308	3,402	3,503	3,613	3,732
				A	15	16	16	16	16	16	17	17	17	18	18
ACS500NT1A_	*ERF37G-C1*	5	130	C	17,078	19,353	21,856	24,607	27,629	30,946	34,579	38,551	42,885	47,603	52,727
				P	4,360	4,538	4,704	4,862	5,012	5,156	5,296	5,433	5,569	5,706	5,844
				A	22	23	24	24	25	25	26	26	27	27	28
			120	C	18,544	21,008	23,715	26,688	29,951	33,524	37,432	41,696	46,340	51,384	56,853
				P	4,056	4,206	4,347	4,482	4,611	4,736	4,860	4,983	5,107	5,234	5,365
				A	22	22	23	23	23	24	24	25	25	26	26
			110	C	19,962	22,605	25,509	28,696	32,190	36,013	40,187	44,735	49,679	55,042	60,847
				P	3,754	3,880	4,000	4,116	4,228	4,340	4,451	4,564	4,681	4,802	4,930
				A	21	21	21	22	22	23	23	23	24	24	25
			100	C	21,341	24,155	27,247	30,641	34,357	38,421	42,852	47,675	52,912	58,586	64,718
				P	3,457	3,564	3,667	3,768	3,868	3,969	4,072	4,180	4,293	4,413	4,542
				A	20	20	20	21	21	21	22	22	22	23	23
			90	C	22,692	25,668	28,940	32,530	36,462	40,757	45,438	50,528	56,049	62,024	68,475
				P	3,169	3,261	3,351	3,441	3,533	3,628	3,727	3,833	3,947	4,070	4,204
				A	19	19	19	20	20	20	21	21	21	22	22

C: Capacidad en Btu/h; P: Potencia consumida en W; A: Amperes consumidos.
Cálculos considerados con retorno de gas al compresor 22R, subenfriamiento de 4R.

TSE: TEMPERATURA SATURADA DE EVAPORACIÓN.
TSC: TEMPERATURA SATURADA DE CONDENSACIÓN.

AISCOLD | CAPACIDADES R-449A 208-230/3/60Hz

Modelo Unidad	Compresor	H. P	TSC		TSE ºF C=Capacidad Btu's/h P=Potencia Watts A=Corriente Amps.										
					-10	-5	0	5	10	15	20	25	30	35	40
ACS200NT1B_	ERF15G-D1	2	130	C	7,259	8,226	9,290	10,459	11,744	13,153	14,697	16,386	18,228	20,233	22,411
				P	1,993	2,075	2,151	2,223	2,291	2,357	2,421	2,484	2,546	2,608	2,672
				A	7	7	7	7	7	7	8	8	8	8	8
			120	C	7,882	8,929	10,080	11,344	12,730	14,249	15,910	17,723	19,696	21,841	24,165
				P	1,854	1,923	1,987	2,049	2,108	2,165	2,222	2,278	2,335	2,393	2,453
				A	6	6	7	7	7	7	7	7	7	7	8
			110	C	8,485	9,608	10,842	12,197	13,682	15,307	17,081	19,014	21,116	23,395	25,862
				P	1,716	1,774	1,829	1,882	1,933	1,984	2,035	2,087	2,140	2,195	2,254
				A	6	6	6	6	6	7	7	7	7	7	7
			100	C	9,071	10,267	11,581	13,024	14,603	16,330	18,214	20,264	22,490	24,901	27,508
				P	1,580	1,629	1,677	1,723	1,768	1,814	1,862	1,911	1,962	2,017	2,077
				A	6	6	6	6	6	6	6	6	7	7	7
			90	C	9,645	10,910	12,301	13,827	15,498	17,323	19,313	21,477	23,823	26,363	29,105
				P	1,449	1,491	1,532	1,573	1,615	1,658	1,704	1,752	1,804	1,861	1,922
				A	6	6	6	6	6	6	6	6	6	6	6
ACS250NT1B_	ERF19G-D1	2.5	130	C	8,891	10,076	11,379	12,811	14,385	16,111	18,003	20,071	22,327	24,783	27,451
				P	2,317	2,411	2,500	2,584	2,663	2,740	2,814	2,887	2,959	3,032	3,105
				A	7	8	8	8	8	8	9	9	9	9	9
			120	C	9,655	10,937	12,347	13,895	15,593	17,454	19,488	21,708	24,126	26,752	29,600
				P	2,155	2,235	2,310	2,382	2,450	2,517	2,582	2,648	2,714	2,781	2,851
				A	7	7	8	8	8	8	8	8	8	9	9
			110	C	10,393	11,769	13,281	14,940	16,759	18,749	20,923	23,290	25,864	28,657	31,679
				P	1,995	2,062	2,126	2,187	2,247	2,306	2,365	2,425	2,487	2,552	2,620
				A	7	7	7	7	7	8	8	8	8	8	8
			100	C	11,111	12,576	14,186	15,952	17,888	20,003	22,310	24,821	27,548	30,502	33,694
				P	1,837	1,894	1,949	2,002	2,055	2,109	2,164	2,221	2,281	2,345	2,414
				A	7	7	7	7	7	7	7	7	7	8	8
			90	C	11,814	13,363	15,067	16,936	18,983	21,219	23,657	26,307	29,181	32,292	35,651
				P	1,684	1,733	1,781	1,829	1,877	1,928	1,981	2,037	2,097	2,163	2,234
				A	6	6	6	7	7	7	7	7	7	7	7
ACS300NT1B_	ERF21G-D1	3	130	C	9,972	11,301	12,762	14,369	16,134	18,070	20,192	22,511	25,042	27,797	30,789
				P	2,533	2,637	2,733	2,825	2,912	2,996	3,077	3,157	3,236	3,315	3,396
				A	8	8	9	9	9	9	9	10	10	10	10
			120	C	10,829	12,267	13,848	15,584	17,489	19,576	21,858	24,348	27,059	30,005	33,199
				P	2,357	2,444	2,526	2,604	2,679	2,752	2,824	2,895	2,967	3,041	3,117
				A	8	8	8	8	9	9	9	9	9	9	10
			110	C	11,657	13,200	14,896	16,757	18,797	21,029	23,467	26,122	29,009	32,141	35,531
				P	2,181	2,254	2,324	2,391	2,457	2,521	2,586	2,652	2,720	2,790	2,865
				A	8	8	8	8	8	8	8	9	9	9	9
			100	C	12,462	14,105	15,911	17,892	20,063	22,435	25,023	27,839	30,897	34,210	37,791
				P	2,009	2,071	2,131	2,189	2,247	2,306	2,366	2,428	2,494	2,564	2,639
				A	7	7	7	8	8	8	8	8	8	8	8
			90	C	13,250	14,988	16,899	18,996	21,291	23,800	26,533	29,505	32,729	36,218	39,985
				P	1,841	1,895	1,947	1,999	2,053	2,108	2,166	2,227	2,293	2,365	2,443
				A	7	7	7	7	7	7	8	8	8	8	8
ACS400NT1B_	ERF30G-D1	4	130	C	14,404	16,324	18,434	20,754	23,304	26,101	29,165	32,516	36,171	40,150	44,473
				P	3,610	3,757	3,895	4,025	4,150	4,269	4,385	4,498	4,611	4,724	4,839
				A	13	13	13	14	14	14	15	15	15	15	16
			120	C	15,641	17,719	20,002	22,510	25,262	28,276	31,572	35,169	39,085	43,340	47,953
				P	3,358	3,482	3,599	3,711	3,818	3,921	4,024	4,126	4,228	4,333	4,442
				A	12	12	13	13	13	13	14	14	14	14	15
			110	C	16,837	19,066	21,515	24,204	27,151	30,375	33,896	37,731	41,902	46,425	51,321
				P	3,108	3,213	3,312	3,408	3,501	3,593	3,685	3,779	3,875	3,976	4,082
				A	12	12	12	12	12	13	13	13	13	14	14
			100	C	18,000	20,374	22,982	25,844	28,979	32,406	36,144	40,212	44,629	49,414	54,586
				P	2,862	2,951	3,036	3,120	3,202	3,286	3,372	3,460	3,554	3,654	3,761

				A	11	11	11	12	12	12	12	12	13	13	13
			90	C	19,139	21,649	24,409	27,438	30,754	34,376	38,325	42,618	47,275	52,314	57,755
				P	2,624	2,700	2,774	2,849	2,925	3,003	3,086	3,173	3,267	3,369	3,481
				A	11	11	11	11	11	11	12	12	12	12	12
ACS500NT1B_	ERF37G-D1	5	130	C	17,184	19,474	21,992	24,760	27,802	31,139	34,795	38,792	43,153	47,900	53,057
				P	4,327	4,504	4,669	4,825	4,974	5,117	5,256	5,392	5,527	5,663	5,800
				A	14	15	15	15	16	16	16	17	17	17	18
			120	C	18,660	21,139	23,863	26,855	30,138	33,734	37,666	41,957	46,629	51,706	57,209
				P	4,025	4,174	4,314	4,448	4,576	4,701	4,823	4,945	5,069	5,195	5,325
				A	14	14	14	15	15	15	16	16	16	16	17
			110	C	20,087	22,746	25,668	28,876	32,392	36,238	40,438	45,014	49,990	55,386	61,227
				P	3,725	3,851	3,970	4,085	4,197	4,307	4,417	4,530	4,645	4,766	4,893
				A	13	13	14	14	14	14	15	15	15	15	16
			100	C	21,475	24,306	27,418	30,832	34,572	38,661	43,120	47,973	53,243	58,952	65,122
				P	3,431	3,537	3,640	3,740	3,839	3,939	4,042	4,148	4,260	4,380	4,508
				A	13	13	13	13	13	14	14	14	14	15	15
			90	C	22,833	25,828	29,121	32,734	36,690	41,012	45,722	50,844	56,400	62,412	68,904
				P	3,145	3,236	3,326	3,415	3,506	3,600	3,699	3,804	3,917	4,039	4,173
				A	12	12	12	13	13	13	13	13	14	14	14
ACS600NT1B_	ERF45G-D1	6	130	C	20,952	23,744	26,814	30,189	33,897	37,966	42,423	47,297	52,614	58,402	64,689
				P	5,197	5,409	5,608	5,796	5,975	6,146	6,313	6,476	6,638	6,801	6,966
				A	17	18	18	19	19	19	20	20	21	21	21
			120	C	22,751	25,774	29,095	32,743	36,746	41,130	45,924	51,156	56,853	63,042	69,751
				P	4,835	5,013	5,182	5,342	5,496	5,646	5,793	5,940	6,088	6,239	6,396
				A	17	17	17	18	18	18	19	19	19	20	20
			110	C	24,491	27,733	31,296	35,207	39,493	44,183	49,304	54,884	60,950	67,530	74,651
				P	4,474	4,625	4,769	4,906	5,040	5,173	5,306	5,440	5,579	5,724	5,877
				A	16	16	16	17	17	17	18	18	18	19	19
			100	C	26,183	29,635	33,429	37,592	42,152	47,137	52,574	58,492	64,917	71,877	79,400
				P	4,121	4,249	4,371	4,492	4,611	4,731	4,854	4,982	5,117	5,260	5,414
				A	15	15	16	16	16	16	17	17	17	17	18
			90	C	27,840	31,491	35,505	39,910	44,734	50,004	55,747	61,992	68,765	76,096	84,010
				P	3,777	3,887	3,995	4,102	4,211	4,324	4,443	4,569	4,704	4,851	5,011
				A	15	15	15	15	15	16	16	16	16	17	17

C: Capacidad en Btu/h; P: Potencia consumida en W; A: Amperes consumidos.
Cálculos considerados con retorno de gas al compresor 22R, subenfriamiento de 4R.

TSE: TEMPERATURA SATURADA DE EVAPORACIÓN.
TSC: TEMPERATURA SATURADA DE CONDENSACIÓN.

AISCOLD | CARACTERISTICAS

Las unidades condensadoras AISCOLD combinan tecnología, alta eficiencia energética y máxima confiabilidad para ofrecer un desempeño superior en aplicaciones de refrigeración comercial e industrial. Diseñadas para reducir costos operativos, simplificar el mantenimiento y adaptarse a las necesidades de cada proyecto, son la solución ideal para quienes buscan rendimiento, durabilidad y valor a largo plazo.

Nuestras unidades cuentan con las siguientes caracteristicas:

- **Serpentín del condensador tipo micro canal** tecnología de alta eficiencia que maximiza la transferencia de calor
- **Compresor Scroll mca. Embraco**, desempeño confiable y duradero para garantizar una operación continua y eficiente.
- **Ventiladores con motor electrónico**, para mayor ahorro de energía y control preciso
- Diseño flexible disponible **con o sin gabinete metálico** para adaptarse a las necesidades de cada instalación
- Unidades equipadas con **mirilla de refrigerante**, permite una supervisión rápida y sencilla del sistema.